DEGSON ELECTRONICS CO., LTD.

Product Specification

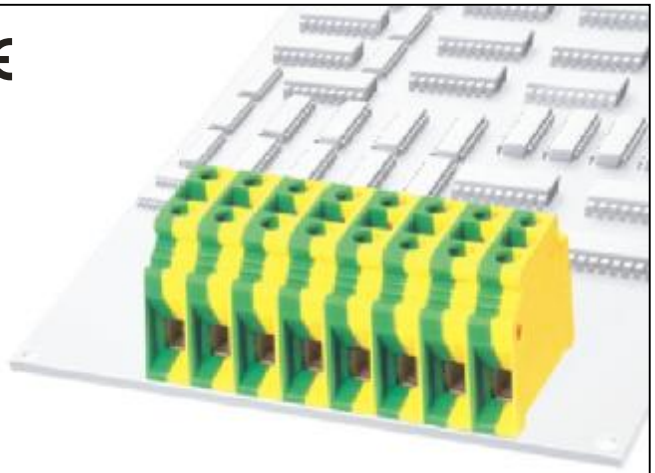

PS10-PE

APPROVAL		
Electrical		
Standard	UL	IEC
Rated voltage	-	-
Rated current	-	-
Wire range	20-6AWG	0.2-10.0mm^2
Withstanding voltage	AC2000V/1Min	
Menchanical		
Torque	1.2Nm(10.5Lb-In)	
Ambient temperature	-40℃~+105 ℃	
Strip length	12mm	
Dimensions		
pitch	10mm(. 394″)	
Poles	1P-XXP	
Material		
Housing	PA66,UL94V-0	
Screws	M4,Steel, Cr^{3+}Znplated	
Pin header	Brass,Tin-plated	

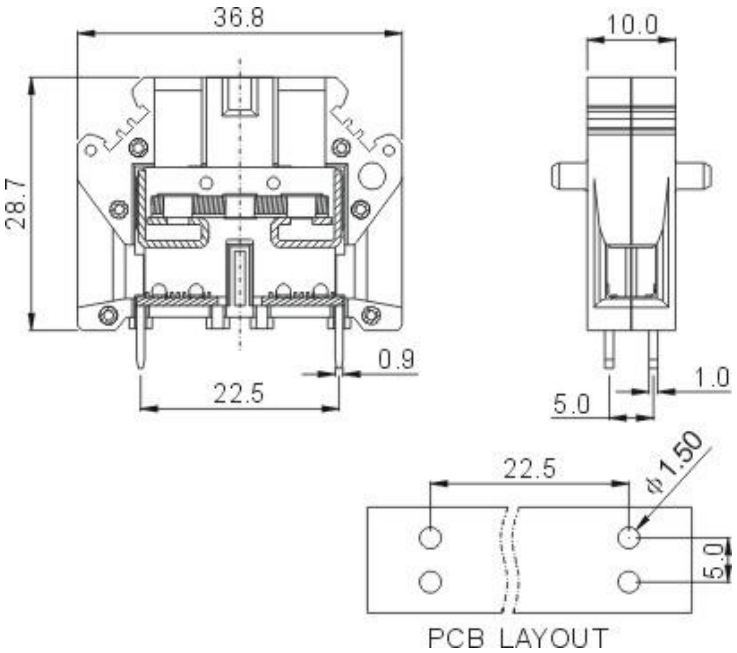

HOW TO ORDER :

[ ] – [ ][ ] P – 1 [ ] – X X X

Customer Request

Series number

No.of pole

1	Single pitch
2	Double pitch

Color

1	Grey	4	Green	7	Trans Parent
2	Blue	5	Orange	8	Yellow
3	Black	6	Red	9	White

mm (INCH)	DEGSON ELECTRONICS CO., LTD.
THIRDANGLE PROJECTION	NAME PS10-PE